Paramax®

Benchmark of Enduring Quality

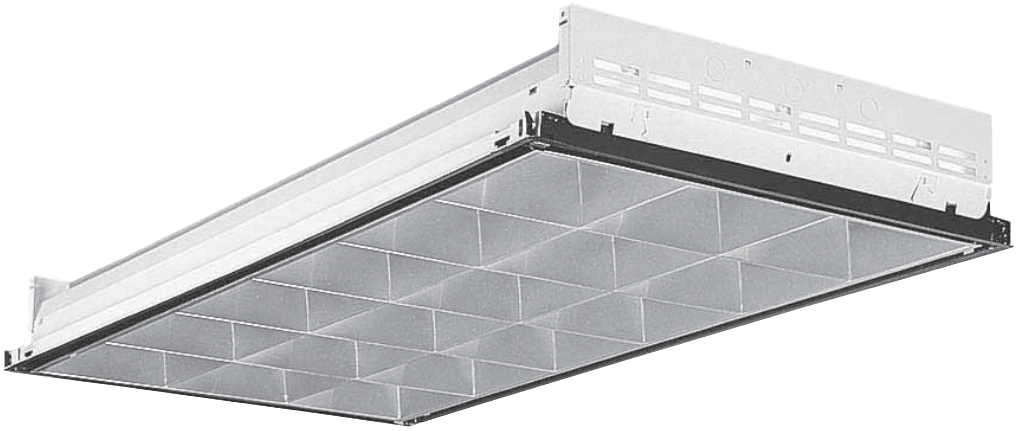

Paramax, today's premier family of parabolic luminaires, offers the most complete, most comprehensive selection of recessed and surface-mounted parabolics in the industry. A marriage of aesthetics and performance, Paramax is a standard by which other parabolics will be measured.

The Paramax Louver

One of the keys to Paramax performance is the precise parabolic shape of the louver. Constructed of reflector-quality aluminum, the Paramax louver is carefully contoured to achieve uniform distribution, minimum high-angle brightness and optimum efficiency. Intersections are rigidly interlocked to maintain the desired contour; and automated systems of fabrication, assembly, cleaning and packaging ensure consistent quality.

The result is precise light control. By concentrating more available light in the photometric zones most crucial to comfort and efficiency, Paramax focuses attention on the task, not the light source.

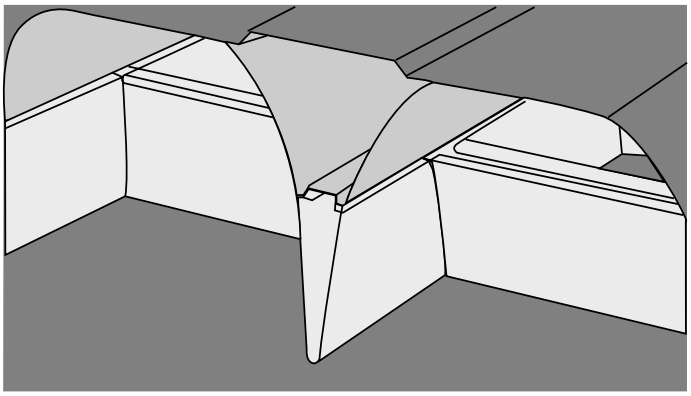

Unique Louver Design – Carefully formed louvers are shaped in a true tangential parabola for superior light control. Contoured housing (2'x4' and 20"x4' models) continues the parabolic shape of the louver to envelop the lamp in a fully reflective cavity. Precise fit between housing and louver eliminates light leaks, minimizes objectionable shadows and bright spots.

Design Flexibility

The versatility of Paramax is further enhanced by a wide variety of optional configurations and companion luminaires, such as the RP architectural perimeter system and the NAT and CNAT narrow aperture series. Paramax models are available for up to eight lamps with a choice of louver configurations, a full range of air functions and trim styles to fit virtually every type of ceiling system.

Paramax 2PM3N

The Paramax 2PM3N Series features innovative, state-of-the-art design that provides optimal performance with T8 lamps and electronic ballasts. The 2PM3N louver is engineered for maximum efficiency while maintaining excellent optical control and visual comfort. The one-piece, roll-formed housing is only 5¼" deep, which allows installation in shallow plenums and features a superior paint finish, hemmed edges for ease of handling and integral T-bar retention.

Full Selection of Sizes

Paramax features the widest range of sizes on the market today. Standard models from 1'x2' wide through 4'x4' are offered, including 20"-wide versions for use in modular ceiling systems. Custom and metric sizes also can be specified, making a Paramax fixture available for every type of commercial application.

Available Sizes

	PM4	2PM3N	PM3	PM2	HPM	PMX
1'x2'			■			
1'x4'			■		■	■
1'x8'						■
2'x2'	■	■		■		■
2'x4'	■	■		■		■
4'x4'			■			
20"x4'			■			
Metric			■			

B-I-A Vertriebs GmbH
Lagerstr. 1
D-64331 Weiterstadt

Telefon **(06151) 8786-0**
Fax **+49-6151-8786-22**
Katalog (06151) 8786-49

Internet Homepage:
http://www.biagmbh.com
Email: info@BiaGmbH.com

Weitere Typen auf Anfrage. Änderungen vorbehalten. Abmessungen in mm.

Further items on request. Dimensions mm. Subject to change without notice.

Created 22.10.2003
L1636

Parabolic Troffers, 3" Louvers

Parabolic Lighting

2PM3N

Paramax ®

Intended Use

High-performance deep-cell parabolic luminaires for superior light control, visual comfort, and light cut-off in open area applications.

Features

Contoured housing for superior light control.

Deep cell premium-grade aluminum louvers in choice of finishes, shipped in thermally sealed polyethylene wrapper.

Automated assembly, mitered corners and interlocking construction assure precise parabolic shape.

Choice of cell configuration and lamping.

Compatible with most common ceiling types and air functions. For complete descriptions, see page 94, 96.

Listings – UL Listed (standard). CSA Certified or NOM Certified (see Options).

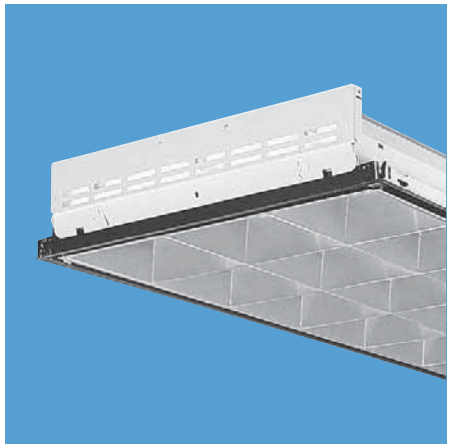

Ordering Information

Example: **2PM3N G B 3 32 18LD 120 GEB**

Series

2PM3N 2' wide

Mounting

- **G** Lay-in grid
- **F** Flanged
- **ST** Screw slot
- **MT** Modular fit-in

Air function

- **B** No air function
- **D** Dual function supply/ return/ removal
- **A** Air/supply/ return
- **H** Heat removal

Number of lamps

2, 3, 4

Not included.

Lamp type

- **17** 17W T8 (24")
- **20** 20W T12 (24")
- **U31** 31W T8 U (1 5/8" leg)
- **U316** 31W T8 U (6" leg)[1]
- **32** 32W T8 (48")
- **40** 40W T12 (48")
- **U40** 40W T12 U (24", 6" leg)[1]
- **CF40** 40W TT5 (24")
- **CF50** 50W TT5 (24")
- **CF55** 55W TT5 (24")

Number of cells

6, 9, 12, 16, 18, 24, 32

Louver finish

- **ND** Achroma® non-iridescent diffuse silver
- **LD** Low iridescent anodized diffuse silver
- **LS** Low iridescent anodized specular silver[2]
- **C** Diffuse gold anodized (Champagne)[2]
- **W** White enamel[2]

Options[2]

- **1/3** One 3-lamp ballast
- **1/4** One 4-lamp ballast
- **GEB** Electronic ballast, ≤20% THD
- **GEB10IS** T8 electronic ballast, ≤10% THD, instant start
- **GEB10RS** T8 electronic ballast, ≤10% THD, rapid start
- **CSA** CSA Certified
- **NOM** NOM Certified

See page 91 for others.

Voltage

120, 277, 347, MVOLT*

Others available.

* 120-277V. Must specify GEB10IS.

Availability and Dimensions

Nominal size	Series	Number of lamps	Lamp type	Number of cells[3] (Rows x number in row)	Height[2] in. (cm)
2x2	2PM3N	2	17, 20, U31, U316, U40	**9**(3x3), **16**(4x4)	5¼ (13.3)
		2	CF40, CF50, CF55	**9**(3x3), **16**(4x4)	5¼ (13.3)
		2	17, 20, U31, CF40, CF50, CF55	6(2x3), 12(4x3)	5 13/16 (14.8)
		2	U316, U40	6(2x3), 12(3x4)	6 7/8 (17.5)[4]
		3	17, 20, U31, CF40, CF50, CF55	**9**(3x3), **16**(4x4)	5¼ (13.3)
		3	17, 20, CF40, CF50, CF55	12(3x4)	5 13/16 (14.8)
		4	17, 20	**9**(3x3), **16**(4x4)	5¼ (13.3)
		4	CF40, CF50, CF55	**9**(3x3), **16**(4x4)	5 13/16 (14.8)
		4	17, 20, CF40, CF50, CF55	12(4x3)	5 13/16 (14.8)
2x4	2PM3N	2	32, 40	**12**(2x6), 16(2x8), 24(4x6)	5¼ (13.3)
		3	32, 40	**18**(3x6), 24(3x8)	5¼ (13.3)
		4	32, 40	12(2x6), 16(2x8), 18(3x6),	5¼ (13.3)
		4	32, 40	24(4x6), **32**(4x8)	5¼ (13.3)

NOTES:

1. Not available on 3-lamp fixtures. Use U31.
2. Some options increase fixture depth. Consult sales representative if plenum depth is a factor.
3. Popular cell configurations are shown in **bold** type.
4. For 5 13/16" (14.8 cm) deep 2 U40 or 2 U316, specify **1C** option.

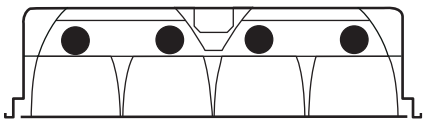

Parabolic Lighting

PM3

Paramax ®

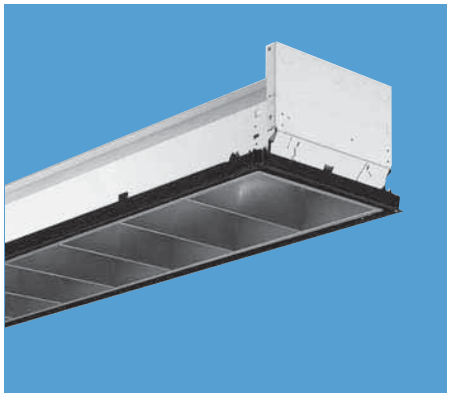

Parabolic Troffers, 3" Louvers

Intended Use

Full family of high performance deep-cell parabolic luminaires for superior light control, visual comfort, and light cut-off in open area applications.

Features

Contoured housing for superior light control.

Deep-cell, premium-grade aluminum louvers in choice of finishes, shipped in thermally sealed polyethylene wrapper.

Automated assembly, mitered corners and interlocking construction ensure precise parabolic shape.

Choice of cell configuration and lamping.

Compatible with virtually all ceiling types and air functions. For complete descriptions, see pages 94 and 96.

Surface-mounted versions also available. See page 42.

Standard sizes up to 4'x4'— special and metric sizes also available. Consult Lithonia Lighting sales representative.

Listings – UL Listed (standard). CSA Certified or NOM Certified (see Options).

Ordering Information

Example: **PM3 G B 2 32 8LD 120 GEB**

Series

- **PM3** 1' wide
- **20PM3** 20" wide
- **2PM3** 2' wide
- **4PM3** 4' wide

Mounting

- **G** Lay-in grid
- **F** Flanged
- **MT** Modular fit-in
- **ST** Screw slot

Air function

- **B** No air function
- **A** Air supply/ return
- **H** Heat removal
- **D** Dual function supply/ return/ removal

Number of lamps

1, 2, 3, 4, 6, 8

Not included.

Lamp type

- **17** 17W T8 (24")
- **20** 20W T12 (24")
- **25** 25W T8 (36")
- **30** 30W T12 (36")
- **32** 32W T8 (48")
- **U31** 31W T8 U (1⅝" leg)
- **U316** 31W T8 U (6" leg)[1]
- **40** 40W T12 (48")
- **U40** 40W T12 U (6" leg)[1]
- **CF40** 40W TT5 (24")

Number of cells

3, 4, 6, 8
9, 12, 16
18, 24, 32, 36, 64

Louver finish

- **ND** Achroma® non-iridescent diffuse silver[2]
- **LD** Low iridescent anodized diffuse silver
- **LS** Low iridescent anodized specular silver

Voltage

- **120**
- **277**
- **347**
- **MVOLT***

Others available.

* 120-277V. Must specify GEB10IS.

Options

- **1/3** One 3-lamp ballast
- **1/4** One 4-lamp ballast
- **GEB** Electronic ballast, ≤20% THD
- **GEB10IS** T8 electronic ballast, ≤10% THD, instant start
- **GEB10RS** T8 electronic ballast, ≤10% THD, rapid start
- **CSA** CSA Certified
- **NOM** NOM Certified

See pages 90 & 91 for others.

NOTES:

1. Not available on 3-lamp fixtures. Use U31.
2. PM3 1x1 and 1x2 not available with ND Achroma® option.
3. Popular cell configurations are shown in **bold** type.
4. Some options increase fixture depth. Consult sales representative if plenum depth is a factor.
5. For 5 13/16" (14.8 cm) deep 2 U40 or 2 U316, specify **1C** option.

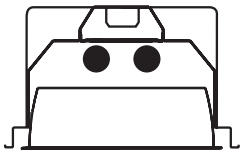

Availability and Dimensions

Nominal size	Series	Number of lamps	Lamp type	Number of cells[3] (Rows x number in row)	Height[4] in. (cm)
1x2	PM3	1, 2	17, 20, U31, CF40	3(1x3), **4**(1x4), **6**(2x3), 8(2x4)	7¼ (18.4)
		1	U40, U316	3(1x3), **4**(1x4), **6**(2x3), 8(2x4)	7¼ (18.4)
1x4	PM3	1, 2, 3	32, 40	6(1x6), **8**(1x8), **9**(1x9)	7¼ (18.4)
		2	32, 40	12(2x6), **16**(2x8)	7¼ (18.4)
20x4	20PM3	2	32, 40	**12**(2x6), 16(2x8), 18(3x6), 24(3x8)	5 15/16 (15.1)
		3	32, 40	**18**(3x6), **24**(3x8)	5 15/16 (15.1)
		4	32, 40	**12**(2x6), 16(2x8), 18(3x6), 24(3x8)	5 15/16 (15.1)
2x2	2PM3	2	U40, U316	6(2x3), **9**(3x3), 12(3x4), **16**(4x4)	6⅞ (17.5)[5]
		2	17, 20, U31, CF40	6(2x3), **9**(3x3), 12(4x3), **16**(4x4)	5 13/16 (14.8)
		3	17, 20, U31, CF40	**9**(3x3), 12(3x4), 16(4x4)	5 13/16 (14.8)
		4	17, 20, CF40	9(3x3), 12(4x3), **16**(4x4)	5 13/16 (14.8)
2x4	2PM3	2	32, 40	**12**(2x6), 16(2x8), 18(3x6), 24(4x6), 32(4x8)	5 15/16 (15.1)
		3	32, 40	**18**(3x6), **24**(3x8), 32(4x8)	5 15/16 (15.1)
		4	32, 40	12(2x6), 16(2x8), 18(3x6), 24(4x6), **32**(4x8)	5 15/16 (15.1)
4x4	4PM3	6	32, 40	**36**(6x6), 64(8x8)	6½ (16.5)
	4PM3	8	32, 40	36(6x6), **64**(8x8)	6½ (16.5)

Parabolic Troffers, 4" Louvers

Parabolic Lighting

PM4

Paramax ®

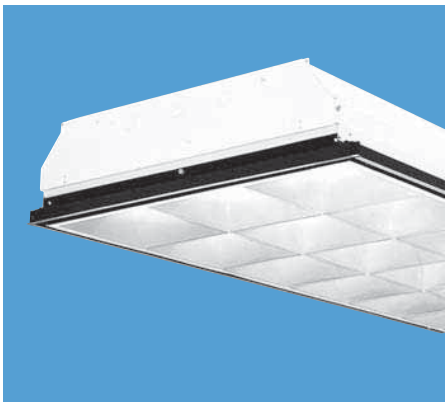

Intended Use

Deep-cell parabolic luminaires for use in open area applications and electronic offices where optical control, visual comfort and light cut-off are important.

Features

4"-deep premium-grade aluminum louvers in choice of finishes, shipped in thermally sealed polyethylene wrapper.

Automated assembly, mitered corners and interlocking construction assure precise parabolic shape.

Choice of cell configuration and lamping.

Compatible with virtually all ceiling types and air functions. For complete descriptions, see pages 94 and 96. Low-iridescent louver material standard in fixtures with silver finish louvers.

Fixtures available in metric sizes. Surface-mount versions also available. Consult sales representative.

Listings – UL Listed (standard). CSA Certified (see Options).

Ordering Information

Example: **2PM4 G B 3 32 18LD 120 GEB**

Series
- **2PM4** 2' wide

Mounting
- **G** Lay-in grid
- **F** Flanged
- **MT** Modular fit-in
- **ST** Screw slot

Air function
- **B** No air function
- **A** Air supply/ return
- **H** Heat removal
- **D** Dual function supply/return/ removal

Number of lamps
- **2, 3, 4**

Not included.

Lamp type
- **17** 17W T8 (24")
- **20** 20W T12 (24")
- **U31** 31W T8 U (1⅝" leg)
- **U316** 31W T8 U (6" leg)[1]
- **32** 32W T8 (48")
- **40** 40W T12 (48")
- **U40** 40W T12 U (6" leg)[1]
- **CF40** 40W TT5 (24")

Number of cells
- **6, 9, 12, 16**
- **18, 24, 32**

Louver finish
- **LD** Low-iridescent anodized diffuse silver
- **LS** Low-iridescent anodized specular silver

Voltage
- **120**
- **277**
- **347**
- **MVOLT***

Others available.

* 120-277V. Must specify GEB10IS.

Options
- **1/3** One 3-lamp ballast
- **1/4** One 4-lamp ballast
- **GEB** Electronic ballast, ≤20% THD
- **GEB10IS** T8 electronic ballast, ≤10% THD, instant start
- **GEB10RS** T8 electronic ballast, ≤10% THD, rapid start
- **CSA** CSA Certified

See pages 90 & 91 for others.

NOTES:
1 Not available on 3-lamp fixtures. Use U31.
2 Popular cell configurations are shown in **bold** type.
3 Some options increase fixture depth. Consult sales representative if plenum depth is a factor.
4 For 6½"(16.5cm) deep 2 U40 or 2 U316, specify **1C** option.

Availability and Dimensions

Nominal size	Series	Number of lamps	Lamp type	Number of cells[2] (Rows x number in row)	Height[3] in. (cm)
2x2	2PM4	2	U40, U316	6(2x3), **9**(3x3), 12(3x4), **16**(4x4)	7 9/16 (19.2)[4]
		2	17, 20, U31, CF40	6(2x3), **9**(3x3), 12(4x3), **16**(4x4)	6½ (16.5)
		3	17, 20, U31, CF40	**9**(3x3), 12(3x4), 16(4x4)	6½ (16.5)
		4	17, 20, CF40	6(2x3), 9(3x3), 12(4x3), **16**(4x4)	6½ (16.5)
2x4	2PM4	2	32, 40	**12**(2x6), 16(2x8), 18(3x6), 24(4x6), 32(4x8)	6 11/16 (17.0)
		3	32, 40	**18**(3x6), **24**(3x8), 32(4x8)	6 11/16 (17.0)
		4	32, 40	12(2x6), 16(2x8), 18(3x6), 24(4x6), **32**(4x8)	6 11/16 (17.0)

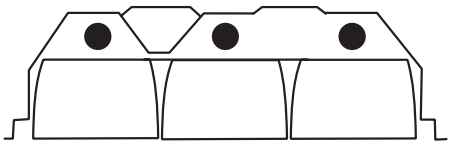

B-I-A Vertriebs GmbH
Lagerstr. 1
D-64331 Weiterstadt

Telefon (06151) 8786-0
Fax +49-6151-8786-22
Katalog (06151) 8786-49

Internet Homepage:
http://www.biagmbh.com
Email: info@BiaGmbH.com

Weitere Typen auf Anfrage. Änderungen vorbehalten. Abmessungen in mm.

Further items on request. Dimensions mm. Subject to change without notice.

Created 22.10.2003
L1636

Parabolic Lighting

PM2

Paramax ®

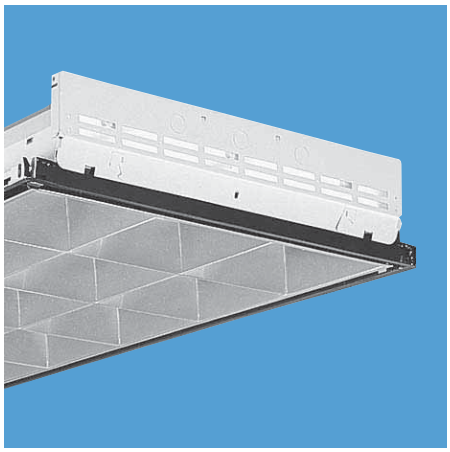

Parabolic Troffers, 2" Louvers

Intended Use

Louvered parabolic luminaires for optical control in general office environments and open spaces.

Features

Contoured housing for superior light control.

2" deep premium-grade aluminum louvers in choice of finishes, shipped in thermally sealed polyethylene wrapper.

Automated assembly, mitered corners and interlocking construction ensure precise parabolic shape.

Choice of cell configuration and lamping.

Compatible with virtually all ceiling types and air functions. For complete descriptions, see pages 94 and 96.

Low iridescent louver material standard in fixtures with silver finish louvers.

Listings – UL Listed (standard). CSA Certified (see Options).

Ordering Information

Example: **2PM2 G B 3 32 18LD 120 GEB**

Series
- **2PM2** 2' wide

Mounting
- **G** Lay-in grid
- **F** Flanged
- **MT** Modular fit-in
- **ST** Screw slot

Air function
- **B** No air function
- **A** Air supply/ return
- **H** Heat removal
- **D** Dual function supply/return, removal

Number of lamps
- **2, 3, 4**

Not included.

Lamp type
- **17** 17W T8 (24")
- **20** 20W T12 (24")
- **U31** 31W T8 U ($1^5/_8$" leg)
- **U316** 31W T8 U (6" leg)[1]
- **32** 32W T8 (48")
- **40** 40W T12 (48")
- **U40** 40W T12 U (24")[1]
- **CF40** 40W TT5 (24")

Number of cells
- **6, 9, 12, 16, 18, 24, 25, 32, 36, 55**

Louver finish
- **LD** Low iridescent anodized diffuse silver
- **LS** Low iridescent anodized specular silver

Options
- **1/3** One 3-lamp ballast
- **1/4** One 4-lamp ballast
- **GEB** Electronic ballast, ≤20% THD
- **GEB10IS** T8 electronic ballast, ≤10% THD, instant start
- **GEB10RS** T8 electronic ballast, ≤10% THD, rapid start
- **CSA** CSA Certified

See pages 90 & 91 for others.

Voltage
- **120**
- **277**
- **347**
- **MVOLT***

Others available.

* 120-277V. Must specify GEB10IS.

NOTES:
1. Not available on 3-lamp fixtures. Use U31.
2. Popular cell configurations are shown in **bold** type. Louvers with 25, 36, and 55 cells are 1.5" deep.
3. Some options increase fixture depth. Consult sales representative if plenum depth is a factor.

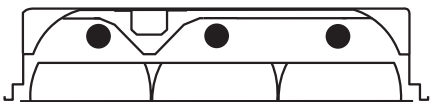

Availability and Dimensions

Nominal size	Number of lamps	Lamp type	Number of cells[2] (Rows x number in row)	Height[3] in. (cm)
2x2	2	U40, U316	6(2x3), **9**(3x3), 12(3x4), **16**(4x4), 25(5x5), 36(6x6)	5¼ (13.3)
	2	17, 20, U31, CF40	6(2x3), **9**(3x3), 12(4x3), **16**(4x4), 25(5x5), 36(6x6)	5¼ (13.3)
	3	17, 20, U31, CF40	**9**(3x3), 12(3x4), 16(4x4), 25(5x5), 36(6x6)	5¼ (13.3)
	4	17, 20, CF40	6(2x3), 9(3x3), 12(4x3), **16**(4x4), 25(5x5), 36(6x6)	5¼ (13.3)
2x4	2	32, 40	**12**(2x6), 16(2x8), 18(3x6), **24**(4x6), 32(4x8), 55(5x11)	5¼ (13.3)
	3	32, 40	**18**(3x6), **24**(3x8), 32(4x8), 55(5x11)	5¼ (13.3)
	4	32, 40	12(2x6), 16(2x8), 18(3x6), **24**(4x6), **32**(4x8), 55(5x11)	5¼ (13.3)

Parabolic Troffers, High-Performance 1'x4'

Parabolic Lighting

HPM3

Paramax ®

Intended Use

High performance parabolic troffer for office lighting systems in VDT applications.

Features

High-efficiency 1'x4' Paramax fixtures.

Lamps stacked vertically in two-lamp model for uniform louver brightness in multilevel switching applications.

Standard louver cross baffle is 3" deep with 4, 6, 8 or 9 cells.

Choice of louver finish and air function.

Compatible with virtually all ceiling types. See page 94.

Available in surface-mount and metric-size versions. Consult sales representative.

Listings – UL Listed (standard). CSA Certified or NOM Certified (see Options).

Ordering Information

Example: **HPM3 G D 2 32 8LD 120 GEB**

Series
- **HPM3** 1' wide

Trim type
- **G** Lay-in grid
- **F** Flanged
- **MT** Modular fit-in
- **ST** Screw slot

Air function
- **B** No air function
- **A** Air supply/ return
- **H** Heat removal
- **D** Dual function supply/return, removal

Number of lamps
- **2**

Not included.

Lamp type
- **32** 32W T8 (48")
- **40** 40W T12 (48")

Number of cells
- **6, 8, 9**

Louver finish
- **LD** Low iridescent anodized diffuse silver
- **LS** Low iridescent anodized specular silver

Voltage
- **120**
- **277**
- **347**
- **MVOLT***

Others available.

* 120-277V. Must specify GEB10IS.

Options
- **1/3** One 3-lamp ballast
- **1/4** One 4-lamp ballast
- **GEB** Electronic ballast, ≤20% THD
- **GEB10IS** T8 electronic ballast, ≤10% THD, instant start
- **GEB10RS** T8 electronic ballast, ≤10% THD, rapid start
- **CSA** CSA Certified
- **NOM** NOM Certified

See pages 90 & 91 for others.

NOTES:
1 Popular cell configurations are shown in **bold** type.

Availability and Dimensions
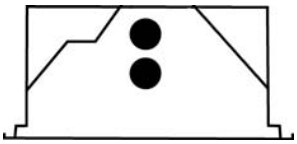
Nominal size	Series	Number of lamps	Lamp type	Number of cells[1] (Rows x number in row)	Height in. (cm)
1x4	HPM3	2	32, 40	6(1x6), **8**(1x8), **9**(1x9)	7¼ (18.4)